ZANUSSI PROFESSIONAL

Modular Cooking Range Line EVO900 Two Wells Gas Fryer 23 liter

ITEM #

MODEL #

NAME #

SIS #

AIA #

392332 (Z9KKGABAMEA)	23+23-lt gas fryer with 2 "V" shaped wells (external burners) and 4 half size baskets - free standing

Short Form Specification

Item No.

High efficiency 40 kW burners in stainless steel. Suitable for natural gas or LPG. Deep drawn V-Shaped wells. Oil drains through a tap into a container positioned under the well. Height adjustable feet in stainless steel. Exterior panels in stainless steel. Worktop in 20/10, stainless steel. Right-angled side edges eliminate gaps and possible dirt traps between units.

APPROVAL:

Main Features

- Deep drawn V-Shaped wells.
- High efficiency 40 kW burners in stainless steel with flame failure device attached to the outside of the well.
- Thermostatic regulation of oil temperature up to a maximum of 190 °C.
- Flame failure device on each burner.
- Overheat protection thermostat as standard on all units.
- All major compartments located in front of unit for ease of maintenance.
- Piezo spark ignition for added safety.
- Supplied as standard with 4 half size baskets and 1 right and left side doors for cupboard.
- Optional portable oil quality monitoring tool (code 9B8081) for efficient oil management.

Construction

- All exterior panels in Stainless Steel with Scotch Brite finishing.
- Model has right-angled side edges to allow flush fitting joints between units, eliminating gaps and possible dirt traps.
- Interior of well with rounded corners for ease of cleaning.
- Unit is 900mm deep to give a larger working surface area.

Included Accessories

- 2 of DOOR FOR OPEN BASE CUPBOARD PNC 206350
- 2 of 2 half size baskets for 18/23lt well fryers PNC 927223

Optional Accessories

- OIL FILTER S/S FOR 23 LT FRYERS PNC 200086 ❑
- Junction sealing kit PNC 206086 ❑
- Draught diverter, 150 mm diameter PNC 206132 ❑
- Matching ring for flue condenser, 150 mm diameter PNC 206133 ❑
- 4 wheels, 2 swivelling with brake (EVO700/900). It is mandatory to install with base supports for feet/wheels. PNC 206135 ❑
- Flanged feet kit PNC 206136 ❑
- Pair of side kicking strips PNC 206180 ❑
- Hygienic lid for 23lt fryers PNC 206201 ❑
- Frontal kicking strip for 23lt fryers in two parts PNC 206203 ❑
- Extension pipe for oil drainage for 15lt, 18lt, 23lt fryers PNC 206209 ❑
- Flue condenser for 1 module, 150 mm diameter PNC 206246 ❑
- Chimney upstand, 800 mm PNC 206304 ❑
- Base support for wheels (lateral) for 23lt fryers and pastacookers and refrigerated bases (900) PNC 206372 ❑
- Chimney grid net, 400mm PNC 206400 ❑
- KIT G.25.3 (NL) GAS NOZZLES FOR 900 FRYERS PNC 206467 ❑
- SEDIMENT TRAY FOR 23LT FRYER PNC 921023 ❑
- 2 half size baskets for 18/23lt well fryers PNC 927223 ❑
- Pressure regulator for gas units PNC 927225 ❑
- 1 full size basket for 18/23lt well fryers PNC 927226 ❑
- Unclogging rod for 23lt fryers drainage pipe PNC 927227 ❑
- Deflector for floured products for the 23lt fryer PNC 960645 ❑

The company reserves the right to make modifications to the products without prior notice. All information correct at time of printing.

Modular Cooking Range Line
EVO900 Two Wells Gas Fryer
23 liter

Front

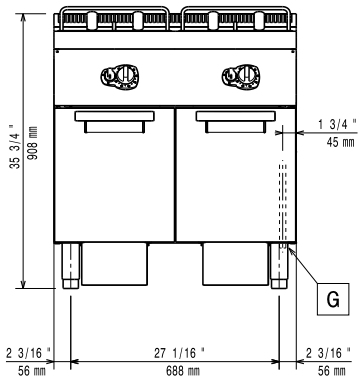

Side

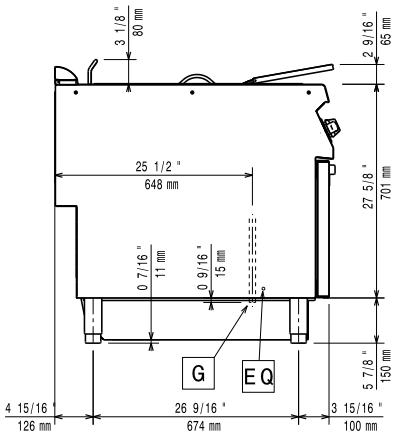

EQ = Equipotential screw
G = Gas connection

Top

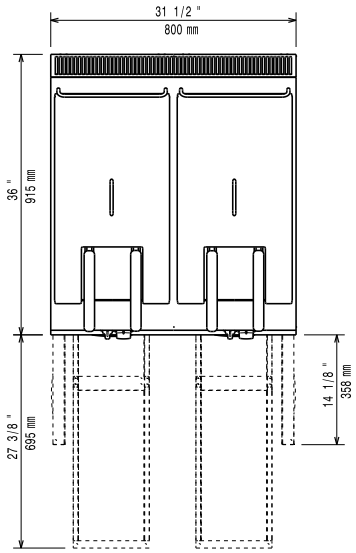

Gas

Gas Power:	42 kW
Standard gas delivery:	Natural Gas G20 (20mbar)
Gas Type Option:	LPG;Natural Gas
Gas Inlet:	1/2"

Key Information:

If appliance is set up or next to or against temperature sensitive furniture or similar, a safety gap of approximately 150 mm should be maintained or some form of heat insulation fitted.

Usable well dimensions (width):	340 mm
Usable well dimensions (height):	575 mm
Usable well dimensions (depth):	400 mm
Well capacity:	21 lt MIN; 23 lt MAX
Performance*:	56.8 kg\hr
Thermostat Range:	120 °C MIN; 190 °C MAX
Net weight:	115 kg
Shipping weight:	126 kg
Shipping height:	1080 mm
Shipping width:	1020 mm
Shipping depth:	860 mm
Shipping volume:	0.95 m³
***Based on:**	Inspired by ASTM F1361, ensuring max productivity
[NOT TRANSLATED]	GF92M23

The company reserves the right to make modifications to the products without prior notice. All information correct at time of printing.

2026.03.04